Minarik Automation & Control

RGT Series

Models:
RGT300U
RGT310U
RGT400U

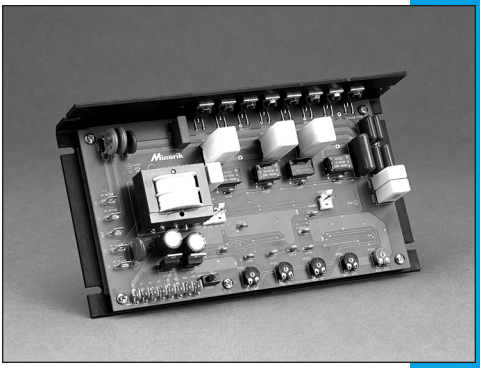

SCR, Adjustable Speed
Regenerative Drives
for DC Brush Motors

User's Manual

Copyright © 2002 by
Minarik Corporation

All rights reserved. No part of this manual may be reproduced or transmitted in any form without written permission from Minarik Corporation. The information and technical data in this manual are subject to change without notice. Minarik Corporation and its Divisions make no warranty of any kind with respect to this material, including, but not limited to, the implied warranties of its merchantability and fitness for a given purpose. Minarik Corporation and its Divisions assume no responsibility for any errors that may appear in this manual and make no commitment to update or to keep current the information in this manual.

Printed in the United States of America.

Safety Warnings

- This symbol ⚠ denotes an important safety tip or warning. Please read these sections carefully prior to performing any of the instructions contained in that section.

- Have a qualified electrical maintenance technician install, adjust and service this equipment. Follow the National Electrical Code and all other applicable electrical and safety codes, including the provisions of the Occupational Safety and Health Act (OSHA), when installing equipment.

- Reduce the chance of an electrical fire, shock, or explosion by proper grounding, over-current protection, thermal protection, and enclosure. Follow sound maintenance procedures.

⚠ **It is possible for a drive to run at full speed as a result of a component failure.** Minarik strongly recommends the installation of a master switch in the main power input to stop the drive in an emergency.

This drive is not isolated form earth ground. Circuit potentials are at 115 VAC or 230 VAC above earth ground. Avoid direct contact with the printed circuit board or with circuit elements to prevent the risk of serious injury or fatality. Use a non-metallic screwdrive for adjusting the calibration trimpots.

Contents

Specifications **1**
Dimensions **2**
Regenerative Drives **4**
Installation **6**
Mounting 6
Heat sinking 7
Wiring 7
Line fusing 8
Speed adjust potentiometer 9
Connections 10
Line frequency switch 13
+15V and –15V terminals 14
Voltage follower 15
Operation **16**
Before applying power 16
Startup 16
Line starting and line stopping 17
Automatic restart upon power restoration 17
Regenerative deceleration 17
Regenerative braking 18
SO502 and INHIBIT Terminals 19
Calibration **21**
MAXIMUM SPEED (MAX SPD) 22
ACCELERATION-DECELERATION (ACC–DEC) 22
FORWARD TORQUE (FWD TQ) 23
REVERSE TORQUE (REV TQ) 24
IR COMPENSATION (IR COMP) 25

Application Notes **27**
Connection to other Minarik devices 27
Optional speed adjust potentiometer connections 29
Troubleshooting **32**
Before troubleshooting 32
Replacement Parts **36**
Unconditional Warranty **back cover page**

Tables

Table 1. Recommended Line Fuse Sizes 8
Table 2. INHIBIT plug harnesses 18
Table 3. Replacement Parts 36

Figures

Figure 1. RGT Series Dimensions 2
Figure 2. RGT-PCM Series Dimensions 3
Figure 3. Four Quadrant Operation 5
Figure 4. Speed Adjust Potentiometer 9
Figure 5. Speed Adjust Potentiometer Connections 10
Figure 6. AC Line and Motor Connections 11
Figure 7. - PCM CONNECTIONS 12
Figure 8. Line Frequency Switch 13
Figure 9. +15V and –15V terminals 14
Figure 10. Voltage Follower Connection 15
Figure 11. RUN/STOP Switch for Regenerative Deceleration 17
Figure 12. SO502 and INHIBIT Terminals 19
Figure 13. Typical FWD TQ, REV TQ, and IR COMP Settings
(actual settings may vary with each application) 26
Figure 14. RGT Series Connections to DLC600 and PCM4 27
Figure 15. RGT Series Connection to 200-0386A
Limit Switch Logic Board 28
Figure 16. Forward-Reverse Switch 29
Figure 17. Forward-Stop-Reverse Switch 29
Figure 18. Independent Adjustable Speeds (Forward Direction) 30
Figure 19. Independent Forward and Reverse Speeds 30
Figure 20. Independent Forward and Reverse Speeds with a
Forward-Stop-Reverse Switch 31

Specifications

Model	Max. Armature Current (Amps DC)	HP Range with 115 VAC Applied	HP Range with 230 VAC Applied
RGT300U	10.0 †	1/4–1 †	n.a
RGT310U	3.0	1/20–1/8	n.a.
RGT400U	10.0 †	n.a.	1/2–2 †

† Maximum armature current and horsepower range apply when drive is attached to additional heat sink: Minarik part number 223-0235. Use heat sink when armature current is above 7 ADC.

AC Line Voltage (RGT300U/RGT310U)	115 VAC, ±10%, 50/60 Hz, single phase
AC Line Voltage (RGT400U)	230 VAC, ±10%, 50/60 Hz, single phase
Armature Voltage (RGT300U/RGT310U)	0–90 VDC
Armature Voltage (RGT400U)	0–180 VDC
Form Factor	1.37 at base speed
Acceleration Time Range	0.5–6 seconds
Deceleration Time Range	0.5–6 seconds
Analog Input Voltage Range (isolated; S0 to S2)	–10 to +10 VDC
Input Impedance (S0 to S2)	32KΩ
Load Regulation	1% of base speed or better
Vibration	0.5G max. (0–50 Hz) 0.1G max.(> 50 Hz)
Ambient Temperature Range	10°C–55°C

Dimensions

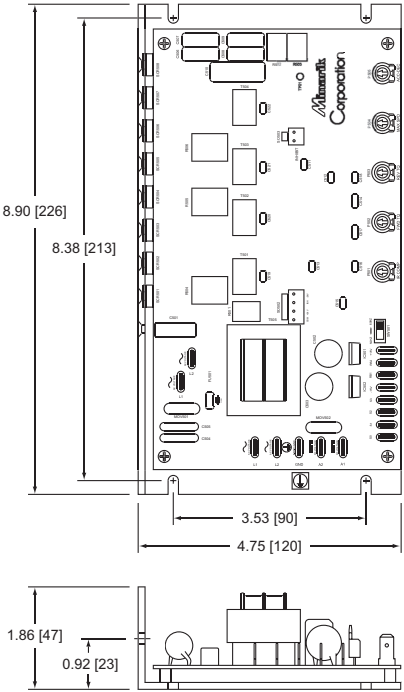

ALL DIMENSIONS IN INCHES [MILLIMETERS]

Figure 1. RGT Series Dimensions

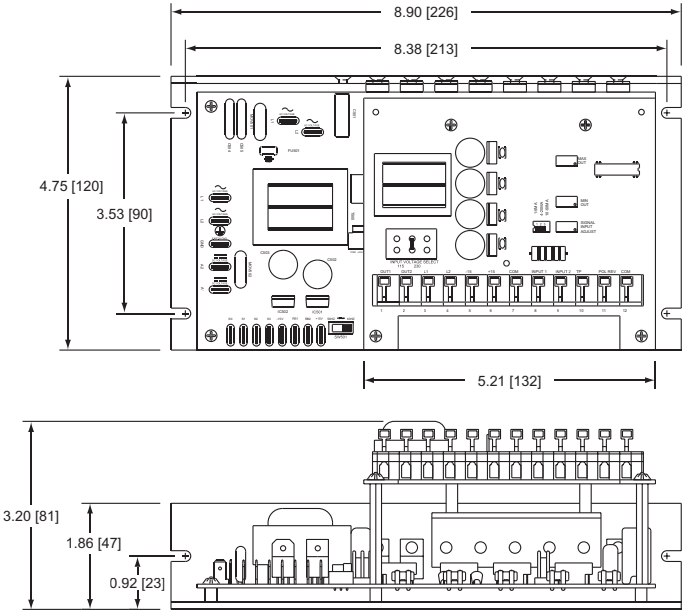

ALL DIMENSIONS IN INCHES [MILLIMETERS]

Figure 2. RGT-PCM Series Dimensions

Regenerative Drives

Most non-regenerative, variable speed, DC drives control current flow to a motor in one direction. The direction of current flow is the same direction as the motor rotation. Non-regenerative drives operate in Quadrant 1, and also in Quadrant 3 if the drive is reversible (see Figure 3, page 4). Motors must stop before reversing direction. Unless dynamic braking is used, non-regenerative drives cannot oppose an overhauling load, and cannot decelerate a load faster than coasting to a lower speed.

Regenerative drives operate in two additional quadrants: Quadrant 2 and Quadrant 4. In these quadrants, motor torque is in the opposite direction of motor rotation.

Regenerative drives can reverse a motor without contactors, switches, brake resistors, and inhibit plugs. They can also control an overhauling load and decelerate a load faster than it would take to coast to a lower speed.

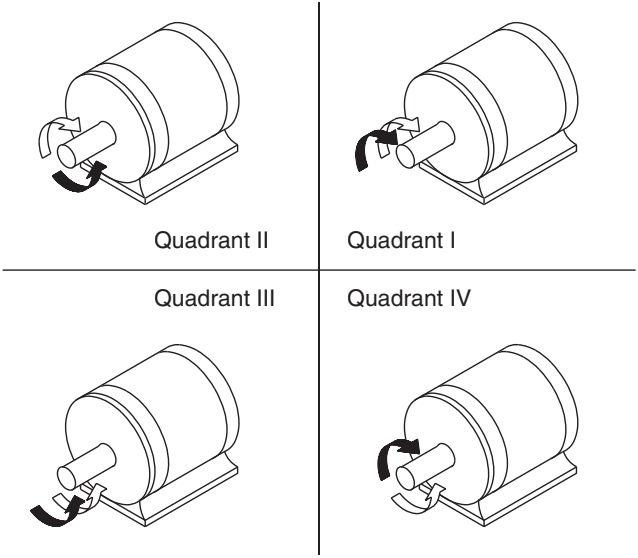

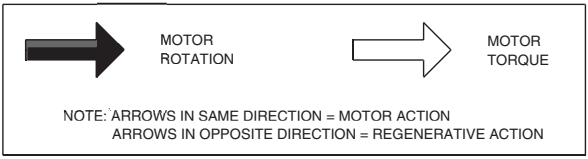

Figure 3. Four Quadrant Operation

Installation

Mounting

Drive components are sensitive to electrostatic fields. Avoid contact with the circuit board directly. Hold the drive by the chassis only.

Protect the drive from dirt, moisture, and accidental contact. Provide sufficient room for access to the terminal block and calibration trimpots.

Mount the drive away from other heat sources. Operate the drive within the specified ambient operating temperature range.

Prevent loose connections by avoiding excessive vibration of the drive.

Mount the drive with its board in either a horizontal or vertical plane. Six 0.188 inch (4.8 mm) wide slots in the chassis accept #8 pan head screws. Fasten either the large base or the narrow flange of the chassis to the subplate.

The chassis must be earth grounded for noise suppression. To ground the chassis, connect earth ground to the GND terminal.

Heat sinking

RGT Series drives require an additional heat sink when the continuous armature current is above 7 ADC. Use Minarik heat sink kit part number 223–0235. Use a thermally conductive heat sink compound (such as Dow Corning® 340 Heat Sink compound) between the drive chassis and the heat sink surface for optimum heat transfer.

Wiring

- Use 18 AWG wire for speed adjust potentiometer wiring. Use 16 AWG wire for motor and AC line voltage wiring.
- Twist speed adjust potentiometer wires to avoid picking up unwanted electrical noise. Use shielded cable if wires are longer than 18 in. (46 cm).
- Keep speed adjust potentiometer wires away from power carrying lines or sources of electrical noise that can cause erratic operation. Never run speed adjust potentiometer wires in the same conduit used for the motor and AC line voltage wires.
- It may be necessary to earth ground the shielded cable. If noise is produced by devices other than the drive, ground the shield at the drive end. If noise is generated by a device on the drive, ground the shield at the end away from the drive. Do not ground both ends of the shield.

Line fusing

Minarik drives require external fuses for protection. Use fast acting fuses rated for 250 VAC or higher, and approximately 150% of the maximum armature current. Fuse L1 only when the line voltage is 115 VAC. Fuse both L1 and L2 when the line voltage is 230 VAC.

Table 1 lists the recommended line fuse sizes.

Table 1. Recommended Line Fuse Sizes

90 VDC Motor Horsepower	180 VDC Motor Horsepower	Max. DC Armature Current (amps)	AC Line Fuse Size (amps)
1/20	1/10	0.5	3
1/15	1/8	0.8	3
1/8	1/4	1.5	5
1/6	1/3	1.7	5
1/4	1/2	2.6	8
1/3	3/4	3.5	8
1/2	1	5.0	10
3/4	1 1/2	7.6	15
1	2	10	20

Minarik Corporation offers two fuse kits: part number 050–0069 (3–8A Fuse Kit) and 050–0073 (5–20A Fuse Kit). Both fuse kits include a 1/8A pico fuse (part number 050–0064) which protects the transformer and logic.

Speed adjust potentiometer

Install the circular insulating disk between the mounting panel and the 10K ohm speed adjust potentiometer (see Figure 4). Mount the speed adjust potentiometer through a 0.38 inch (10 mm) hole with the hardware provided. Twist the speed adjust potentiometer wire to avoid picking up unwanted electrical noise. If potentiometer leads are longer than 18 inches (46 cm), use shielded cable.

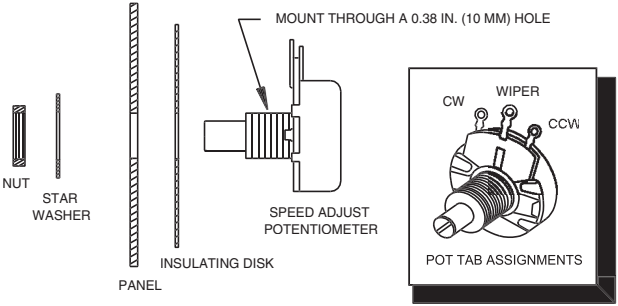

Figure 4. Speed Adjust Potentiometer

Connections

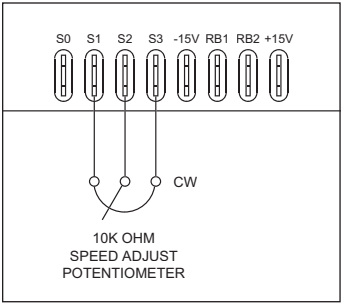

(a) Bidirectional Operation

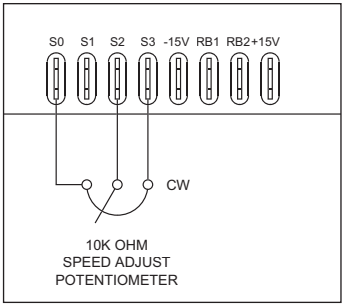

(b) Unidirectional Operation,
Forward Direction

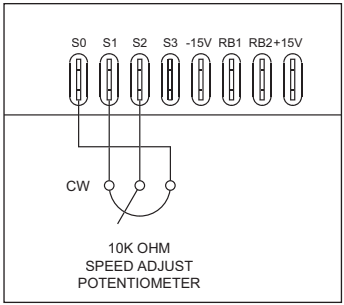

(c) Unidirectional Operation,
Reverse Direction

Figure 5. Speed Adjust Potentiometer Connections

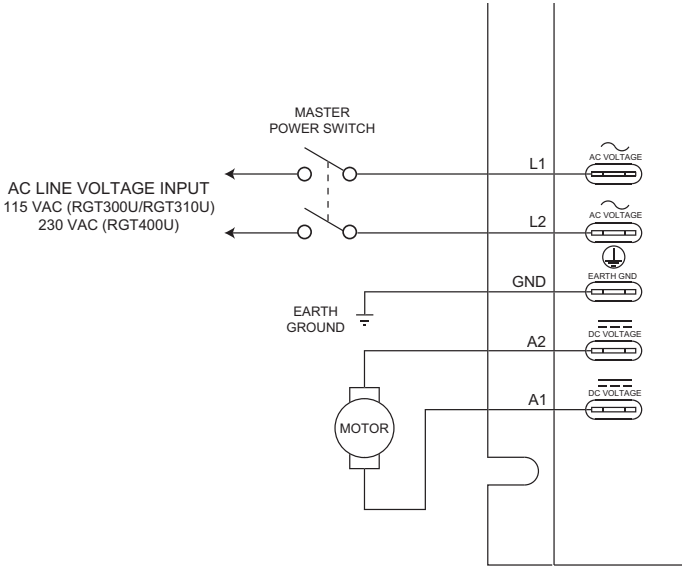

Figure 6. AC Line and Motor Connections

ASSUMPTIONS: Minarik drives supply motor voltage from A1 and A2 terminals. It is assumed throughout this manual that, when A1 is positive with respect to A2 , the motor will rotate clockwise (CW) while looking at the output shaft protruding from the front of the motor. If this is opposite of the desired rotation, simply reverse the wiring of A1 and A2 with each other.

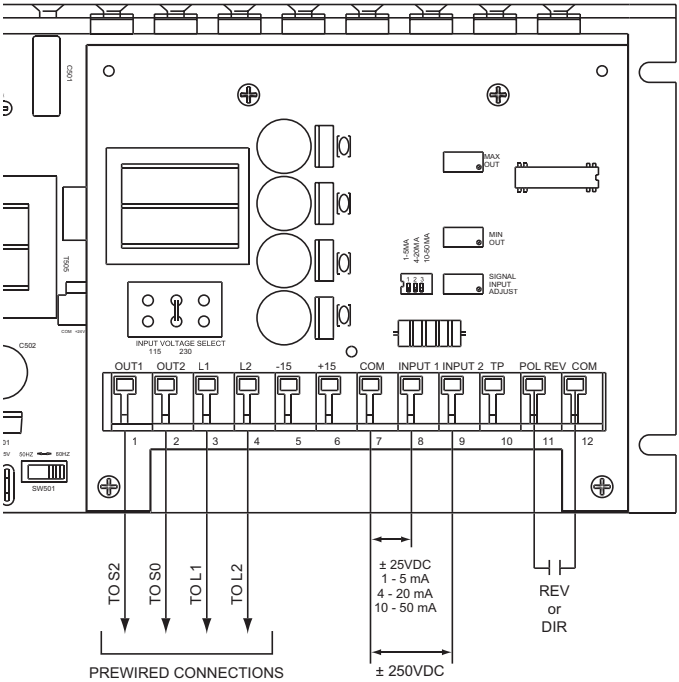

Figure 7. - PCM CONNECTIONS

Line frequency switch

SW501 of the top board is the line frequency switch (see Figure 8). Set the switch to 50HZ if the line frequency is 50 Hz, or to 60HZ if the line frequency is 60 Hz.

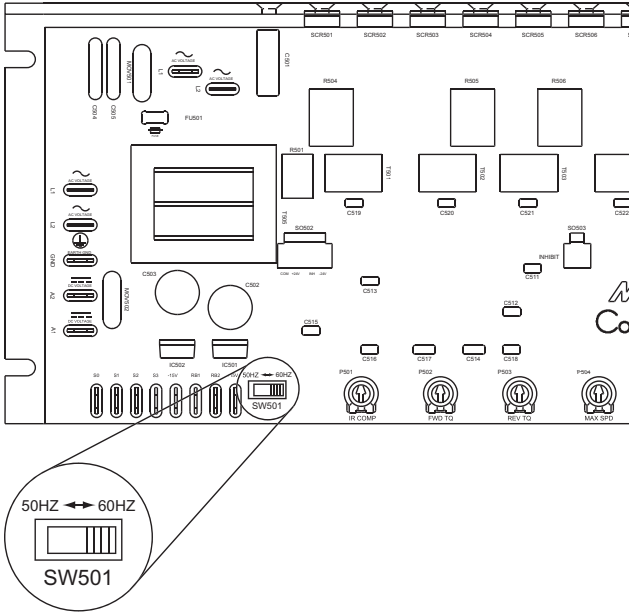

Figure 8. Line Frequency Switch

+15V and –15V terminals

RGT Series drives can supply a regulated +15 and -15 VDC signal (each sourcing 25 mA maximum) to isolated, external devices. See Figure 9 for the location of these terminals.

Warning

Do not short the +15V and -15V terminals for any reason! Shorting these terminals may cause damage to the drive.

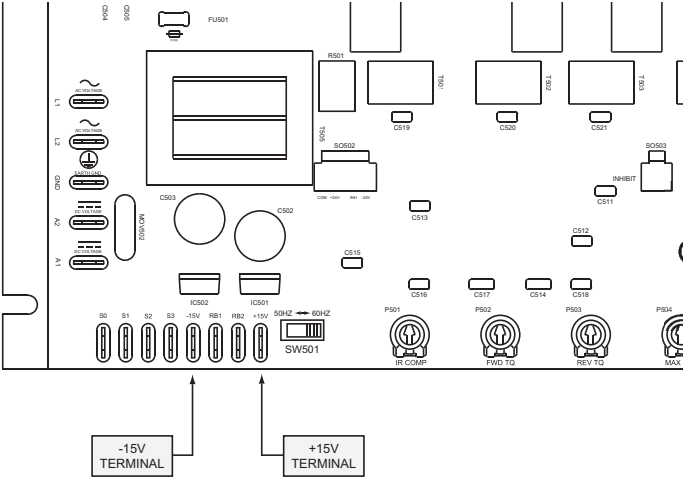

Figure 9. +15V and –15V terminals

Voltage follower

The drive may be wired to follow a floating (isolated) 0 to ±10V signal that is isolated from earth ground instead of using a speed adjust potentiometer. Connect the signal input to S2, and the signal common to S0 (see Figure 10).

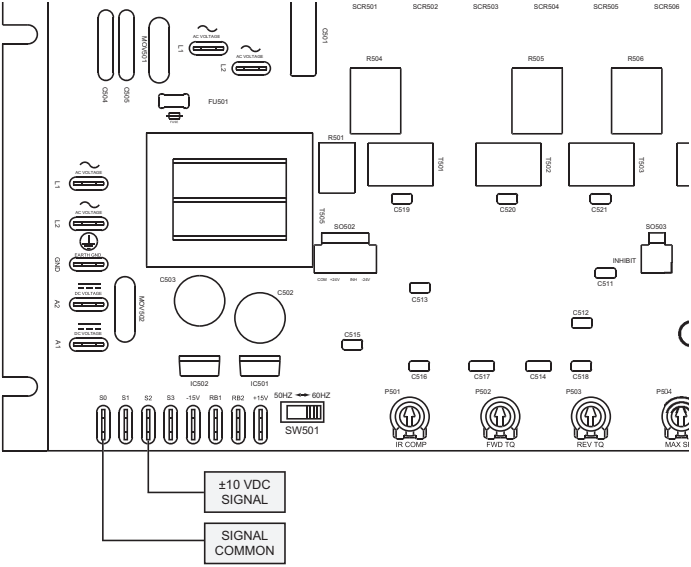

Figure 10. Voltage Follower Connection

Operation

Before applying power

- Verify that no conductive material is present on the printed circuit board.
- Verify that the AC supply is properly balanced.
- Check that the line frequency switch is set to the correct position.

Startup

To start the drive:

1. Set the speed adjust potentiometer for zero speed.
2. Apply AC line voltage.
3. Slowly turn the speed adjust potentiometer clockwise or counterclockwise to rotate the motor in the forward or reverse direction. Continue until the desired speed is reached.
4. To decelerate the motor from set speed to a stop, reset the speed adjust potentiometer for zero speed. To coast the motor from set speed to a stop, remove AC line voltage from the drive .

Line starting and line stopping

When AC line voltage is applied to the drive, the motor accelerates to the set speed. When AC line voltage is removed, the motor coasts to a stop. Line starting and line stopping (applying and removing AC line voltage) is recommended for starting and stopping in emergency situations only. It is not recommended for frequent starting and stopping.

Automatic restart upon power restoration

All drives automatically run to set speed when power is applied. Wiring a latching relay into the AC line is one way to prevent automatic restarting following a power outage.

Regenerative deceleration

Short terminals RB1 and RB2 to regeneratively decelerate a motor to a stop (Figure 11). Calibrate the acceleration and deceleration time by adjusting the ACC–DEC acceleration trimpot.

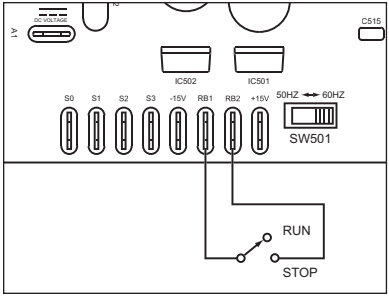

Figure 11. RUN/STOP Switch for Regenerative Deceleration

Regenerative braking

Short the INHIBIT terminals to regeneratively brake the motor (see Figure 12, page 19, for INHIBIT terminal location). Reopening the INHIBIT terminals causes the motor to accelerate to set speed.

Minarik Corporation offers two accessory plug harnesses for the INHIBIT terminals:

Table 2. INHIBIT plug harnesses

Minarik Part Number	Description
201–0024	Inhibit plug with 18 in. (46 cm) wires
201–0079	Inhibit plug with 36 in. (91 cm) wires

Twist inhibit wires and separate them from other power-carrying wires or sources of electrical noise. Use shielded cable if the inhibit wires are longer than 18 inches (46 cm). If shielded cable is used, ground only one end of the shield to earth ground. Do not ground both ends of the shield.

SO502 and INHIBIT Terminals

SO502 terminals are installed for future interfaces. Leave the factory installed jumper (INH and -24 terminals) in place.

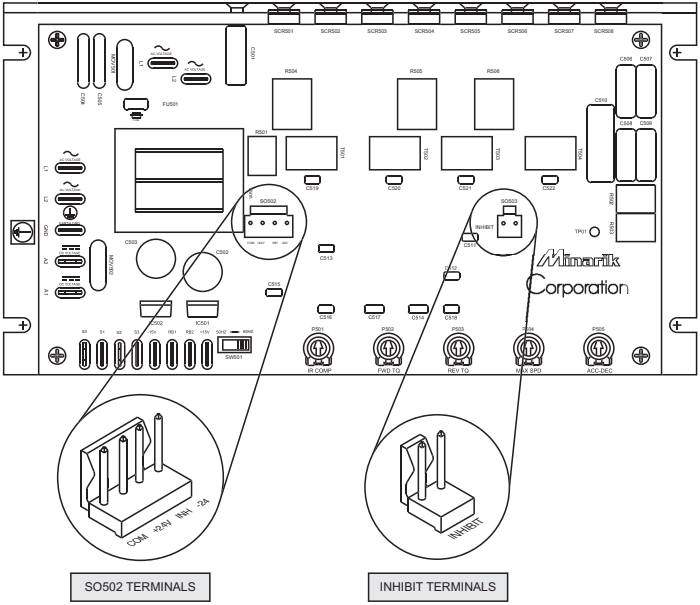

SO502 TERMINALS

INHIBIT TERMINALS

Figure 12. SO502 and INHIBIT Terminals

Warning

For frequent starts and stops, use regenerative deceleration or regenerative braking. Do not use any of these methods for emergency stopping. They may not stop a drive that is malfunctioning. **Removing AC line power (both L1 and L2) is the only acceptable method for emergency stopping.**

Frequent regenerative deceleration or regenerative braking produces high torque. This may cause damage to motors, especially gearmotors that are not properly sized for the application.

Calibration

RGT Series drives have five user adjustable trimpots: MAX SPD, ACC–DEC, FORWARD TORQUE, REVERSE TORQUE, and IR COMP. Each drive is factory calibrated to its maximum current rating. Readjust the calibration trimpot settings to accommodate lower current motors.

All trimpot settings increase with clockwise (CW) rotation, and decrease with counterclockwise (CCW) rotation. Use a non-metallic screwdriver for calibration. Each trimpot is identified on the printed circuit board.

MAXIMUM SPEED (MAX SPD)

The MAX SPD trimpot setting determines the motor speed when the speed adjust potentiometer is turned full CW. It is factory set for maximum rated speed.

To calibrate MAX SPD:

1. Set the MAX SPD trimpot full CCW.
2. Turn the speed adjust potentiometer full CW.
3. Adjust the MAX SPD trimpot until the desired maximum motor speed is reached.

ACCELERATION-DECELERATION (ACC–DEC)

The ACC–DEC trimpot setting determines the time the motor takes to accelerate to a higher speed, or decelerate to a lower speed, in the forward or reverse direction within the limits of available torque. ACC–DEC is factory set for its fastest forward acceleration and deceleration time (full CCW).

Turn the ACC–DEC trimpot CW to increase the acceleration and deceleration time, or CCW to decrease the acceleration and deceleration time.

FORWARD TORQUE (FWD TQ)

Warning

FORWARD TORQUE should be set to 120% of drive nameplate current rating. Continuous operation beyond this rating may damage the motor. If you intend to operate the rating, contact your Minarik representative for assistance.

The FWD TQ trimpot setting determines the maximum torque for accelerating and driving the motor in the forward direction. It also sets the maximum torque for decelerating the motor in the reverse direction. To calibrate FWD TQ, refer to Figure 13 on page 26, or use the following procedure:

1. With the power disconnected from the drive, connect a DC ammeter in series with the armature.
2. Set the FWD TQ trimpot to minimum (full CCW).
3. Set the speed adjust potentiometer to maximum forward speed.
4. Lock the motor shaft. Be sure that the motor is firmly mounted to withstand maximum torque generated by the motor.
5. Apply line power. The motor should be stopped.
6. Slowly adjust the FWD TQ trimpot CW until the armature current is 120% of motor rated armature current.
7. Set the speed adjust potentiometer to minimum.
8. Remove the power from the drive and unlock the motor shaft.
9. Remove the ammeter in series with the motor armature if it is no longer needed and re-apply power to the drive.

REVERSE TORQUE (REV TQ)

Warning

REVERSE TORQUE should be set to 120% of drive nameplate current rating. Continuous operation beyond this rating may damage the motor. If you intend to operate the rating, contact your Minarik representative for assistance.

The REV TQ trimpot setting determines the maximum torque for accelerating and driving the motor in the reverse direction. It also sets the maximum torque for decelerating the motor in the forward direction. To calibrate REV TQ, refer to Figure 13 on page 26, or use the following procedure:

1. With the power disconnected from the drive, connect a DC ammeter in series with the armature.
2. Set the REV TQ trimpot to minimum (full CCW).
3. Set the speed adjust potentiometer to maximum forward speed.
4. Lock the motor shaft. Be sure that the motor is firmly mounted to withstand maximum torque generated by the motor.
5. Apply line power. The motor should be stopped.
6. Slowly adjust the REV TQ trimpot CW until the armature current is 120% of motor rated armature current.
7. Set the speed adjust potentiometer to minimum.
8. Remove the power from the drive and unlock the motor shaft.
9. Remove the ammeter in series with the motor armature if it is no longer needed and re-apply power to the drive.

IR COMPENSATION (IR COMP)

The IR COMP trimpot setting determines the degree to which motor speed is held constant as the motor load changes. It is factory set for optimum motor regulation.

To calibrate IR COMP, refer to Figure 13 on page 26, or use the following procedure:

1. Set the IR COMP trimpot to minimum (full CCW).
2. Set the speed adjust potentiometer until the motor runs at midspeed without load (for example, 900 RPM for an 1800 RPM motor). A hand held tachometer may be used to measure motor speed.
3. Load the motor armature to its full load armature current rating. The motor should slow down.
4. While keeping the load on the motor, rotate the IR COMP trimpot until the motor runs at the speed measured in step 2. If the motor oscillates (overcompensation), the IR COMP trimpot may be set too high (CW). Turn the IR COMP trimpot CCW to stablize the motor.
5. Unload the motor.

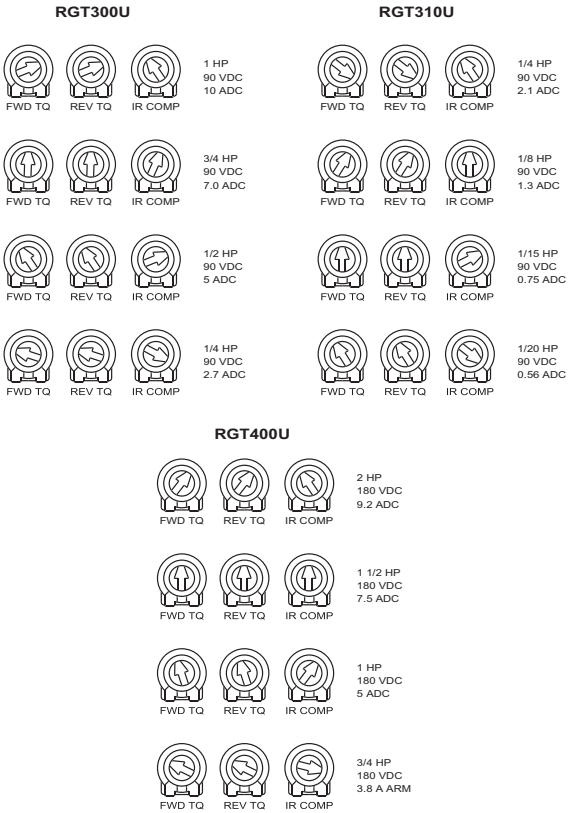

Figure 13. Typical FWD TQ, REV TQ, and IR COMP Settings (actual settings may vary with each application)

Application Notes

Connections to other Minarik devices

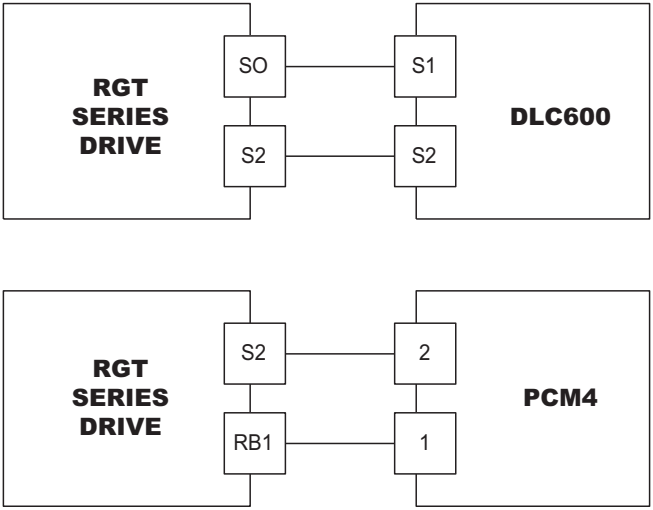

Figure 14. RGT Series Connections to DLC600 and PCM4

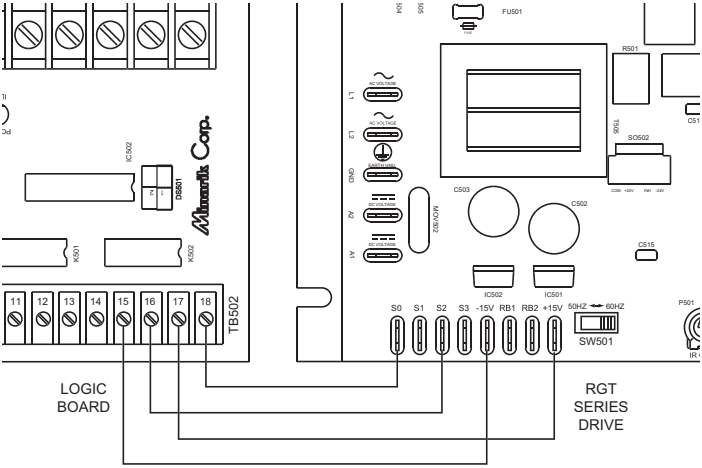

CONNECTIONS	
TB502 on LOGIC BOARD	RGT SERIES DRIVE
15	-15V
16	S2
17	+15
18	S0

Figure 15. RGT Series Connection to 200-0386A
Limit Switch Logic Board

Optional speed adjust potentiometer connections

Use a single pole, two position switch with a single speed adjust potentiometer to plug reverse the motor (Figure 16).

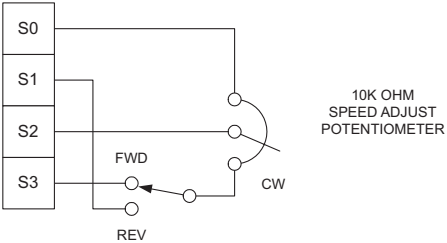

Figure 16. Forward-Reverse Switch

Use a single pole, three position switch with a single speed adjust potentiometer to stop a motor between reversal (Figure 17). Set the switch to the center position to decelerate the motor to a stop.

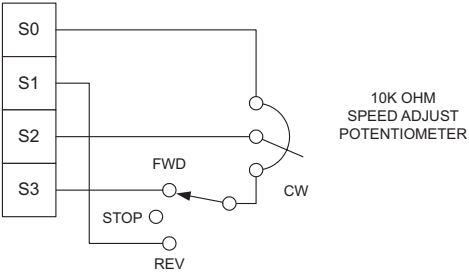

Figure 17. Forward-Stop-Reverse Switch

Connect two speed adjust potentiometers with a single pole two position switch to select between two independent speeds shown in the forward direction (Figure 18). The speed adjust potentiometers can be mounted at two separate operating stations.

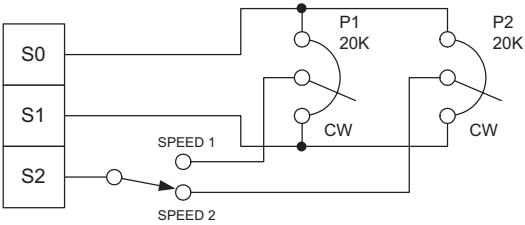

Figure 18. Independent Adjustable Speeds (Forward Direction)

Connect two speed adjust potentiometers as shown in Figure 19 to select between independent forward and reverse speeds.

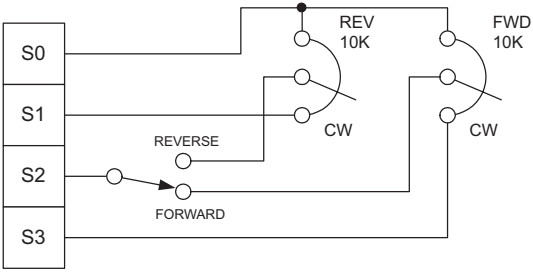

Figure 19. Independent Forward and Reverse Speeds

Use a single pole, three position switch to stop the motor when the switch is in the center position (Figure 20).

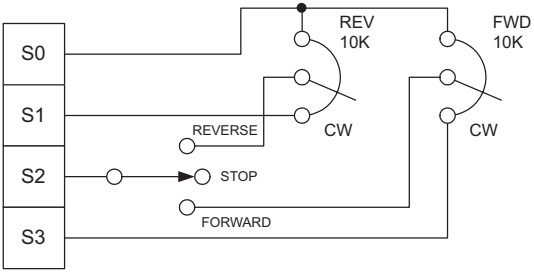

Figure 20. Independent Forward and Reverse Speeds with a Forward-Stop-Reverse Switch

Troubleshooting

Warning

Dangerous voltages exist on the drive when it is powered. When possible, disconnect the AC line voltage from the drive while troubleshooting. Be alert. High voltages can cause serious or fatal injury.

Before troubleshooting

Perform the following steps before starting any procedure in this section:

1. Disconnect AC line voltage from the drive.
2. Check the drive closely for damaged components.
3. Check that no conductive or other foreign material has become lodged on the printed circuit board.
4. Verify that every connection is correct and in good condition.
5. Verify that there are no short circuits or grounded connections.
6. Check that the drive's rated armature outputs are consistent with the motor ratings.
7. Check that the line frequency switch is properly set.

Problem	Possible Causes	Suggested Solutions
External line fuse blows.	1. Line fuse is the wrong size. 2. Motor cable or armature is shorted to ground. 3. Nuisance tripping caused by a combination of ambient conditions and high-current spikes (i.e. reversing).	1. Check that the line fuse is correct for the motor size. 2. Check motor cable and armature for shorts. 3. Add a blower to cool the drive components; decrease FWD TQ and REV TQ settings, **or** resize motor and drive for actual load demand, **or** check for incorrectly aligned mechanical components or “jams”.

Problem	Possible Causes	Suggested Solutions
External line fuse does not blow, but the motor does not run.	1. Speed adjust potentiometer or voltage reference signal is set to zero speed.	1. Increase the speed adjust potentiometer or voltage reference signal setting.
	2. Speed adjust potentiometer is not connected to drive input properly; connections are open.	2. Check connections to input. Verify that connections are not open.
	3. INHIBIT terminals are jumpered.	3. Remove jumper from the INHIBIT terminals.
	4. S2 is shorted to S0.	4. Remove short.
	5. Drive is in current limit.	5. Verify that motor is not jammed. Increase FWD TQ and REV TQ setting if they are set too low.
	6. Drive is not receiving AC line voltage.	6. Apply AC line voltage to L1 and L2.
	7. Motor is not connected.	7. Connect motor to A1 and A2.

Problem	Possible Causes	Suggested Solutions
Motor runs too fast.	1. MAX SPD not calibrated.	1. Calibrate MAX SPD.
Motor will not reach the desired speed.	1. MAX SPD setting is too low. 2. IR COMP setting is too low. 3. Motor is overloaded.	1. Increase MAX SPD setting. 2. Increase IR COMP setting. 3. Check motor load. Resize the motor if necessary.
Motor pulsates or surges under load.	1. IR COMP is set too high. 2. Motor bouncing in and out of current limit.	1. Adjust the IR COMP setting slightly CCW until the motor speed stabilizes. 2. Make sure motor is not undersized for load; adjust FWD TQ and REV TQ trimpot CW.
Motor makes a humming or buzzing noise.	1. Line frequency switch is set for wrong frequency.	1. Set line frequency switch for correct frequency.

For additional assistance, contact your local Minarik Distributor, or the factory direct: PHONE (800) MINARIK or (800) 646-2745
FAX (800) 394-6334

Replacement Parts

Replacement parts are available from Minarik Corporation and its distributors for this drive series.

Table 3. Replacement Parts

Model No.	Symbol	Description	Minarik P/N
RGT300U, RGT300U-PCM			
	R503	0.01W, 5 W Resistor	032–0129
	SCR501–508	800 V, 25 A SCR	072–0042
	T501	3FS–436 Transformer	230–0071
		10KW Potentiometer Kit	202–0003
		Chassis	223-0258
RGT310U, RGT310U-PCM			
	R503	0.1W, 5 W Resistor	032–0100
	SCR501–508	800 V, 25 A SCR	072–0042
	T501	3FS–436 Transformer	230–0071
		10KW Potentiometer Kit	202–0003
		Chassis	223-0258
RGT400U, RGT400U-PCM			
	R503	0.01W, 5 W Resistor	032–0129
	SCR501–508	800 V, 25 A SCR	072–0042
	T501	3FD–436 Transformer	230–0072
		10KW Potentiometer Kit	202–0003
		Chassis	223-0258
Fuse Kits		63 mA Pico Fuse	050-0081
Inhibit Plugs		2-Pin Jumper Harness	201-0085

NOTES

NOTES

Unconditional Warranty

A. Warranty - Minarik Corporation (referred to as "the Corporation") warrants that its products will be free from defects in workmanship and material for twelve (12) months or 3,000 hours, whichever comes first, from date of manufacture thereof. Within this warranty period, the Corporation will repair or replace, at its sole discretion, such products that are returned to Minarik Corporation, 901 East Thompson Avenue, Glendale, CA 91201-2011 USA.

This warranty applies only to standard catalog products, and does not apply to specials. Any returns for special controls will be evaluated on a case-by-case basis. The Corporation is not responsible for removal, installation, or any other incidental expenses incurred in shipping the product to and from the repair point.

B. Disclaimer - The provisions of Paragraph A are the Corporation's sole obligation and exclude all other warranties of merchantability for use, express or implied. The Corporation further disclaims any responsibility whatsoever to the customer or to any other person for injury to the person or damage or loss of property of value caused by any product that has been subject to misuse, negligence, or accident, or misapplied or modified by unauthorized persons or improperly installed.

C. Limitations of Liability - In the event of any claim for breech of any of the Corporation's obligations, whether express or implied, and particularly of any other claim or breech of warranty contained in Paragraph A, or of any other warranties, express or implied, or claim of liability that might, despite Paragraph B, be decided against the Corporation by lawful authority, the Corporation shall under no circumstances be liable for any consequential damages, losses, or expense arising in connection with the use of, or inability to use, the Corporation's product for any purpose whatsoever.

An adjustment made under warranty does not void the warranty, nor does it imply an extension of the original 12-month warranty period. Products serviced and/or parts replaced on a no-charge basis during the warranty period carry the unexpired portion of the original warranty only.

If for any reason any of the foregoing provisions shall be ineffective, the Corporation's liability for damages arising out of its manufacture or sale of equipment, or use thereof, whether such liability is based on warranty, contract, negligence, strict liability in tort, or otherwise, shall not in any event exceed the full purchase price of such equipment.

Any action against the Corporation based upon any liability or obligation arising hereunder or under any law applicable to the sale of equipment or the use thereof, must be commenced within one year after the cause of such action arises.

901 East Thompson Avenue
Glendale, California 91201-2011
Phone: (800) MINARIK or (800) 646-2745
Fax: (800) 394-6334

Document number 250–0242, Revision 1
Printed in the U.S.A – 5/02