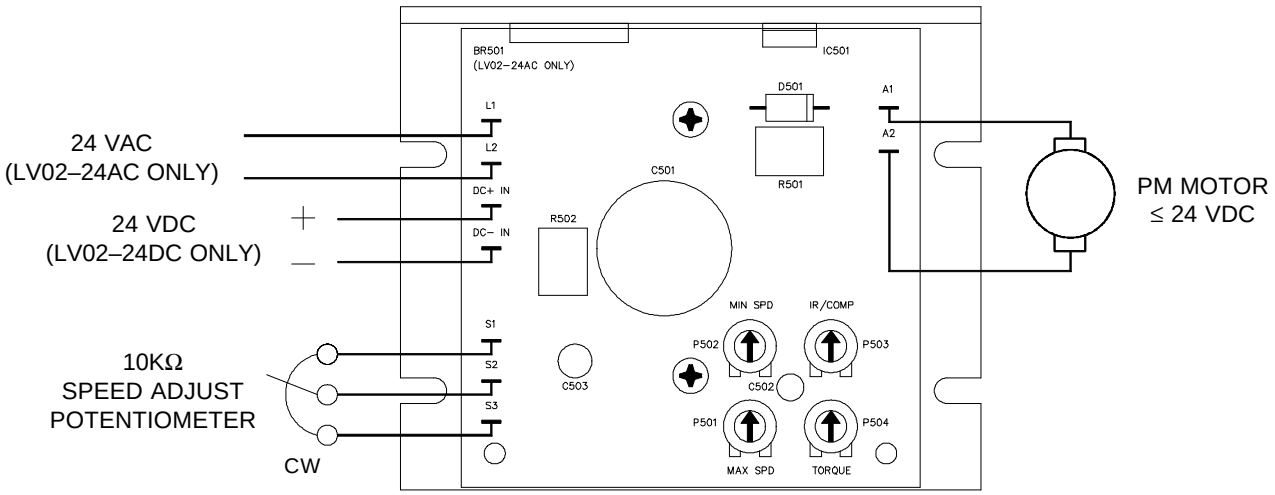

Minarik Automation & Control
901 East Thompson Avenue
Glendale, California 91201-2011

Document Number 250–0232, Revision 1
Printed in the U.S.A. – 6/97

LV02–24AC/LV02–24DC CONNECTIONS

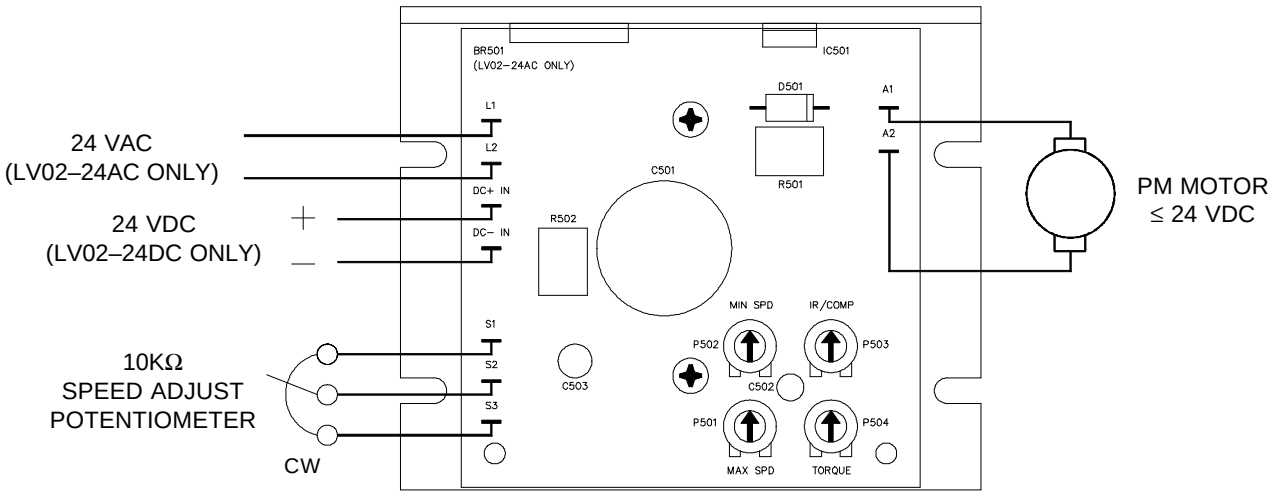

Minarik Automation & Control
901 East Thompson Avenue
Glendale, California 91201-2011

Document Number 250–0232, Revision 1
Printed in the U.S.A. – 6/97

LV02–24AC/LV02–24DC CONNECTIONS